MILLWORK 360

THE DEGREE OF SUPERIOR QUALITY

IMPACT 360 SERIES

WOOD GLAZED OR OPAQUE DOUBLE DOOR w/ TRANSOM

INSWING/OUTSWING "IMPACT"

GENERAL NOTES:

1. This product has been evaluated and is in compliance with the 5th Edition (2014) Florida Building Code (FBC) structural requirements including the "High Velocity Hurricane Zone" (HVHZ).
2. Product anchors shall be as listed and spaced as shown on details. Anchor embedment to base material shall be beyond wall dressing or stucco.
3. When used in the "HVHZ", this product complies with Section 1626 of the Florida Building Code and does not require an impact resistant covering.
4. For 2x stud framing construction, anchoring of these units shall be the same as that shown for 2x buck masonry construction.
5. Site conditions that deviate from the details of this drawing require further engineering analysis by a licensed engineer or registered architect.
6. Outswing configurations meet water infiltration requirements for "HVHZ".
7. Inswing configurations do not meet the water infiltration requirements for the "HVHZ" and shall be installed only in non-habitable areas or at habitable locations protected by an overhang or canopy such that the angle between the edge of canopy or overhang to sill is less than 45 degrees.

TABLE OF CONTENTS

SHEET #	DESCRIPTION
1	Typical Elevations, Design Pressures & General Notes
2	Door Panel Details
3	Door Panel Details
4	Transom Details
5	Glazing & Panel Infil Details
6	Elevations
7	Horizontal & Vertical Cross Sections (2X Buck)
8	Horizontal & Vertical Cross Sections (1X Buck)
9	Vertical Cross Sections (Thresholds)
10	Buck Anchoring
11	Frame Anchoring
12	Hardware Details
13	Bill of Materials & Components

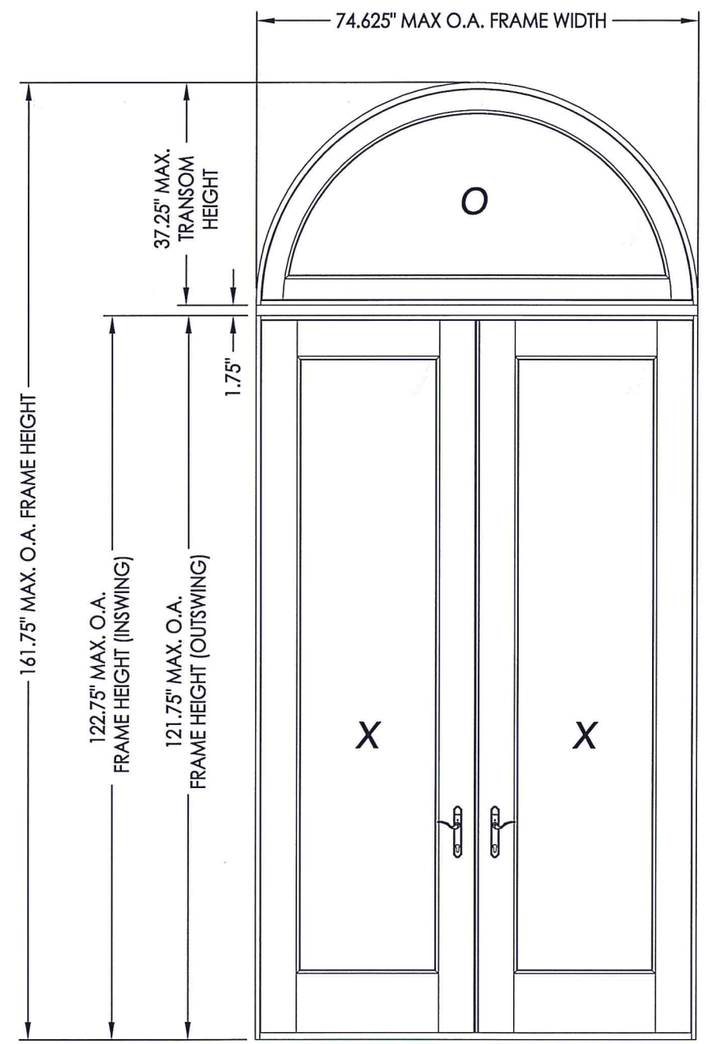

CONFIGURATION	DESIGN PRESSURE (PSF) INSWING		DESIGN PRESSURE (PSF) OUTSWING (WATER INFILTRATION REQUIRED)		DESIGN PRESSURE (PSF) OUTSWING (WATER INFILTRATION NOT REQUIRED)	
	POSITIVE	NEGATIVE	POSITIVE	NEGATIVE	POSITIVE	NEGATIVE
O/XX	+60.0	-60.0	+60.0	-65.0	+65.0	-65.0

STATE OF FLORIDA PROFESSIONAL ENGINEER LYNDON F. SCHMIDT LICENSE No. 43409

4-11-17

Documents Prepared By:
Lyndon F. Schmidt
P.E. No. 43409

RW BUILDING CONSULTANTS, INC.
P.O. Box 230, Valrico, FL 33595
Phone No.: 813.659.9197
FBPE C.A. No. 9813

PRODUCT: MILLWORK 360 WOOD DOOR

PART OR ASSEMBLY: TYPICAL ELEVATION, DESIGN PRESSURES & GENERAL NOTES

NO.	DATE	REVISIONS	BY

DATE: 4/03/17
SCALE: N.T.S.
DWG. BY: JK
CHK. BY: LFS
DRAWING NO.: FL-21891.10
SHEET 1 OF 13

© 2017 R.W. BUILDING CONSULTANTS INC.

R:\Clients\Millwork 360\A - Florida Product Approvals\FL-21891 Wood Doors\C - Drawings\FL-21891 (2014)\FL-21891.9-11.dwg, FL-21891.10

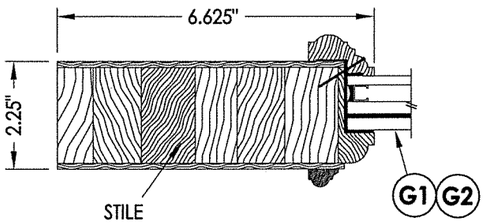

1/2 HORIZONTAL CROSS SECTION

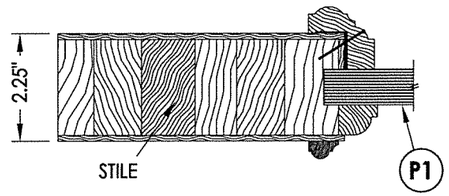

2/2 HORIZONTAL CROSS SECTION

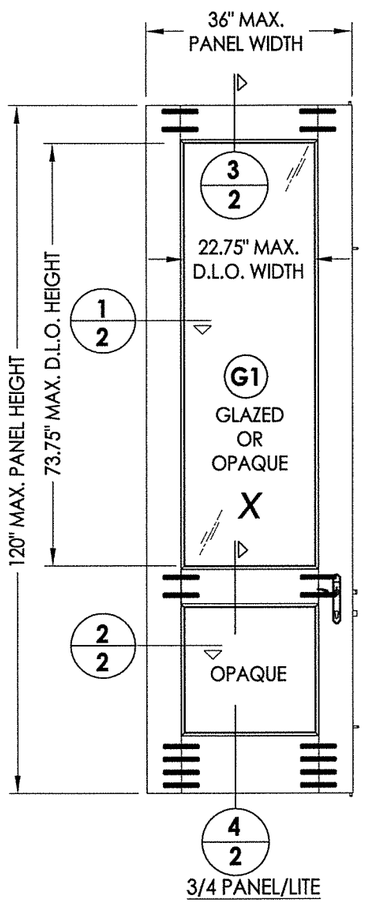

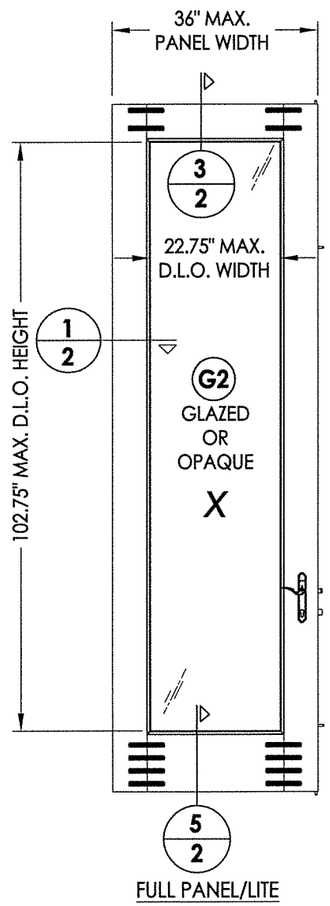

40 WOOD DOOR PANEL (3'-0")
Glazed or Opaque

WOOD DOOR COMPONENTS:
ENGINEERED STAVE CORE: SIPO (UTILE) (G = 0.53)
VENEER/EDGES: CYPRESS (G = 0.42)
NOTE: VENEER/EDGE MAY INCLUDE OAK, CHERRY, WALNUT OR OTHER OPTIONAL HARDWOOD SPECIES w/ G >= 0.42.

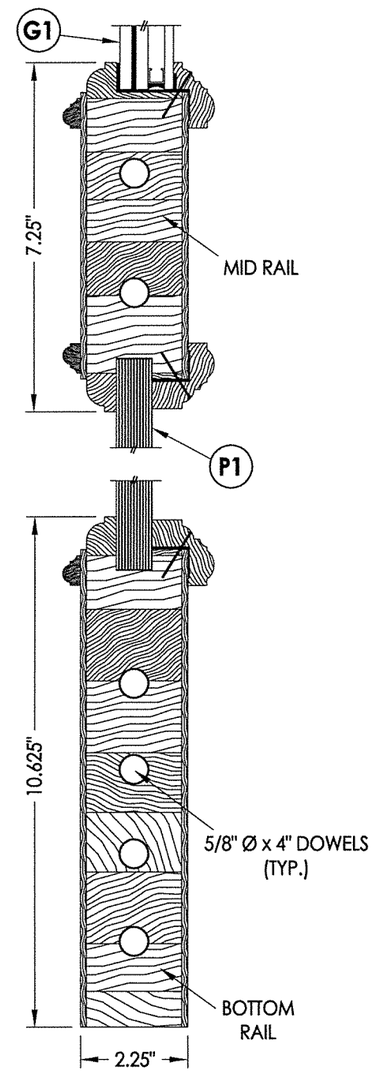

4/2 VERTICAL CROSS SECTION

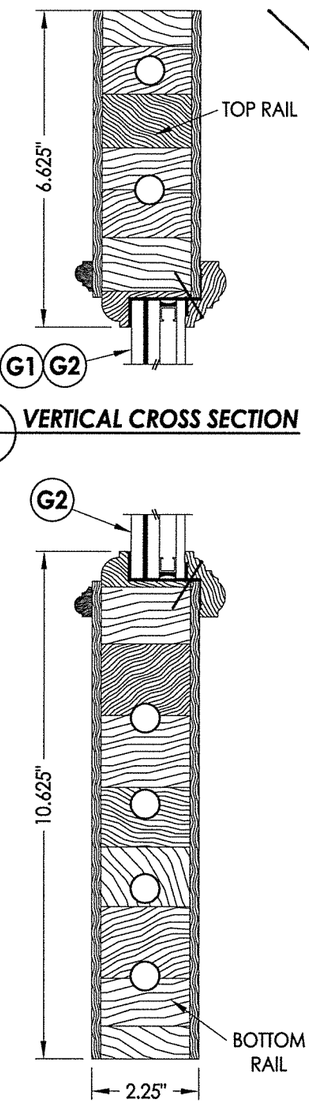

3/2 VERTICAL CROSS SECTION

5/2 VERTICAL CROSS SECTION

L. F. SCHMIDT
LICENSE
No. 43409
STATE OF FLORIDA
PROFESSIONAL ENGINEER

4-11-17

Documents Prepared By:
Lyndon F. Schmidt
P.E. No. 43409

RW BUILDING CONSULTANTS, INC.
P.O. Box 230, Valrico, FL 33595
Phone No.: 813.659.9197
FBPE C.A. No. 9813

PRODUCT: MILLWORK 360 WOOD DOOR

PART OR ASSEMBLY: DOOR PANEL DETAILS

NO.	DATE	REVISIONS	BY

DATE: 4/03/17
SCALE: N.T.S.
DWG. BY: JK
CHK. BY: LFS
DRAWING NO.: FL-21891.10
SHEET 2 OF 13

© 2017 R.W. BUILDING CONSULTANTS INC.

R:\Clients\Millwork 360\A - Florida Product Approvals\FL-21891 Wood Doors\C - Drawings\FL-21891 (2014)\FL-21891.9-11.dwg, 10.2

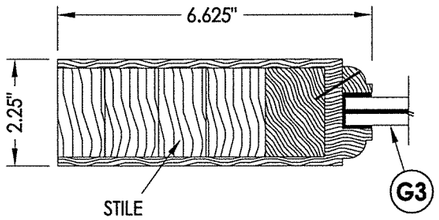

1/3 HORIZONTAL CROSS SECTION

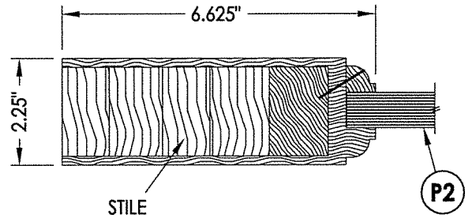

2/3 HORIZONTAL CROSS SECTION

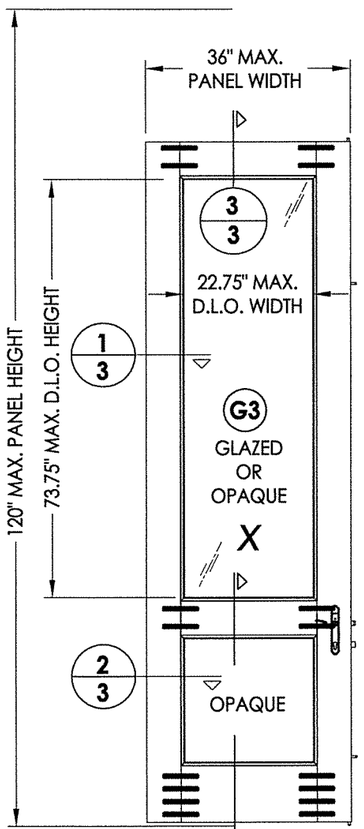

3/4 PANEL/LITE

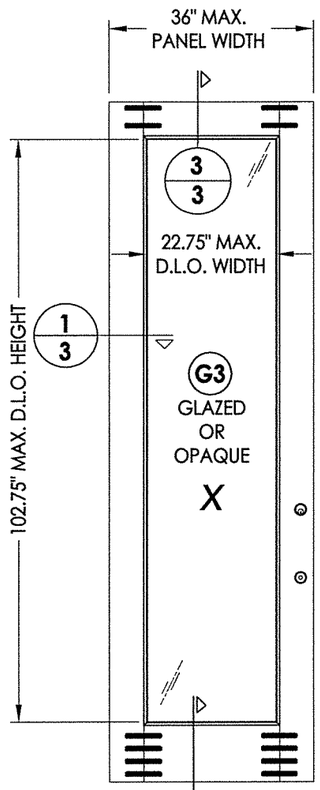

FULL PANEL/LITE

41 WOOD DOOR PANEL (3'-0")
Glazed or Opaque

WOOD DOOR COMPONENTS:
ENGINEERED STAVE CORE: SIPO (UTILE) (G = 0.53)
VENEER/EDGES: CYPRESS (G = 0.42)
NOTE: VENEER/EDGE MAY INCLUDE OAK, CHERRY, WALNUT OR OTHER OPTIONAL HARDWOOD SPECIES w/ G >= 0.42.

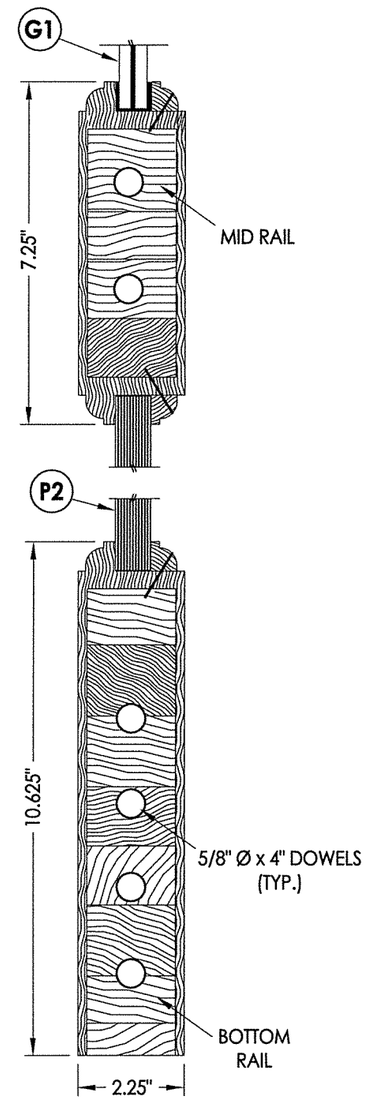

4/3 VERTICAL CROSS SECTION

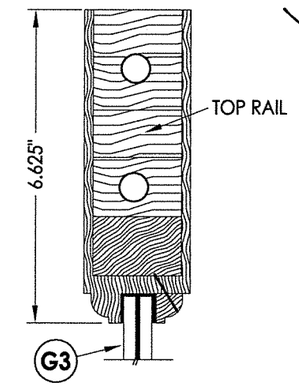

3/3 VERTICAL CROSS SECTION

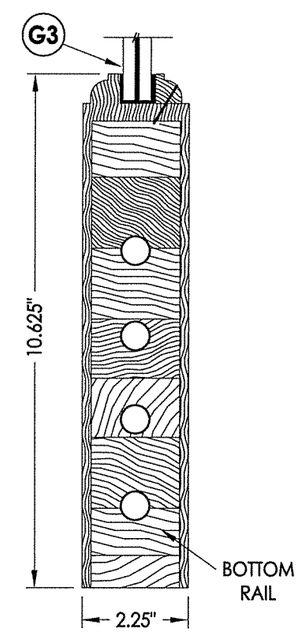

5/3 VERTICAL CROSS SECTION

L. F. SCHMIDT
LICENSE
No. 43409
STATE OF FLORIDA
PROFESSIONAL ENGINEER
4-11-17

Documents Prepared By:
Lyndon F. Schmidt
P.E. No. 43409
RW BUILDING CONSULTANTS, INC.
P.O. Box 230, Valrico, FL 33595
Phone No.: 813.659.9197
FBPE C.A. No. 9813

PRODUCT: MILLWORK 360 WOOD DOOR
PART OR ASSEMBLY: DOOR PANEL DETAILS

NO.	DATE	BY

REVISIONS

DATE: 4/03/17
SCALE: N.T.S.
DWG. BY: JK
CHK. BY: LFS
DRAWING NO.: FL-21891.10
SHEET 3 OF 13

© 2017 R.W. BUILDING CONSULTANTS INC.

R:\Clients\Millwork 360\A - Florida Product Approvals\FL-21891 Wood Doors\C - Drawings\FL-21891 (2014)\FL-21891.9-11.dwg, 10.3

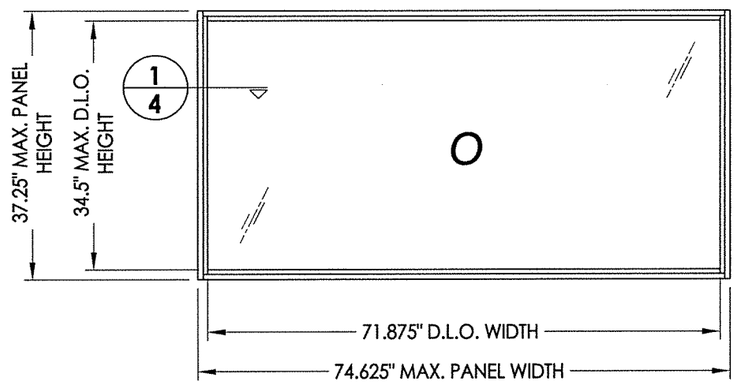

70 **WOOD TRANSOM PANEL**
DIRECT SET

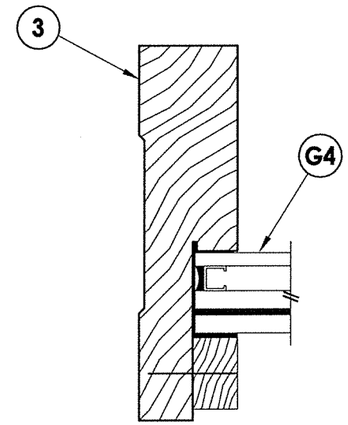

1/4 **HORIZONTAL CROSS SECTION**

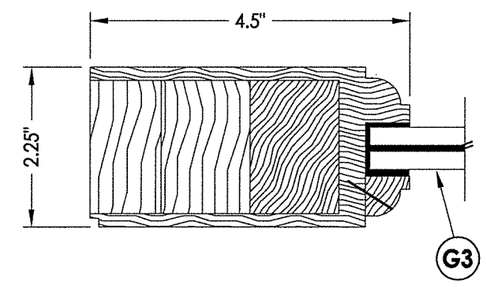

2/4 **HORIZONTAL CROSS SECTION**

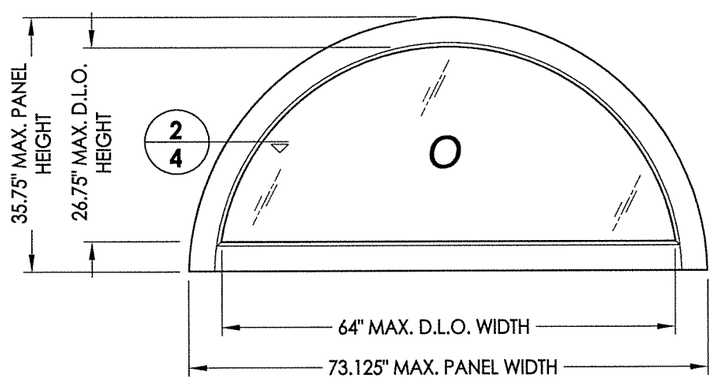

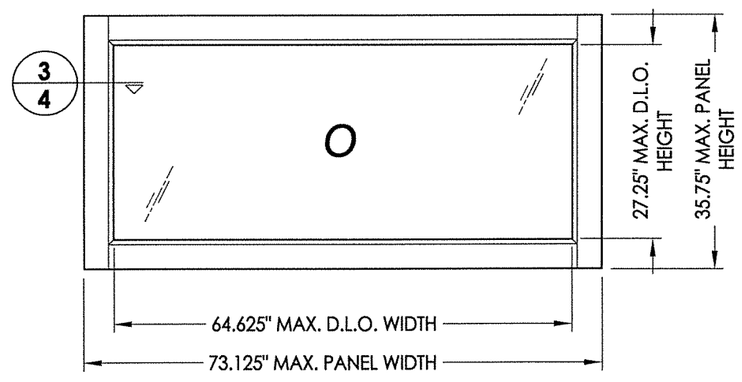

71 **WOOD TRANSOM PANEL**

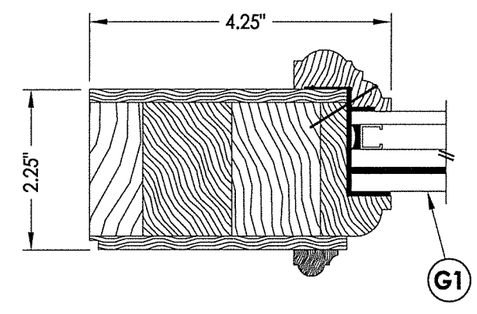

3/4 **HORIZONTAL CROSS SECTION**

NOTE:
1. ALL FRAME CORNERS SECURED WITH (1) 1/4" X 6" LAG SCREW.

L. F. SCHMIDT LICENSE No. 43409 STATE OF FLORIDA PROFESSIONAL ENGINEER

4-11-17

Documents Prepared By:
Lyndon F. Schmidt
P.E. No. 43409

RW BUILDING CONSULTANTS, INC.
P.O. Box 230, Valrico, FL 33595
Phone No.: 813.659.9197
FBPE C.A. No. 9813

PRODUCT: MILLWORK 360 WOOD DOOR

PART OR ASSEMBLY: TRANSOM DETAILS

NO.	DATE	REVISIONS	BY

DATE: 2/14/17
SCALE: N.T.S.
DWG. BY: JK
CHK. BY: LFS
DRAWING NO.: FL-21891.10
SHEET 4 OF 13

© 2017 R.W. BUILDING CONSULTANTS INC.

R:\Clients\Millwork 360\A - Florida Product Approvals\FL-21891 Wood Doors\C - Drawings\FL-21891 (2014)\FL-21891.9-11.dwg, 10.4

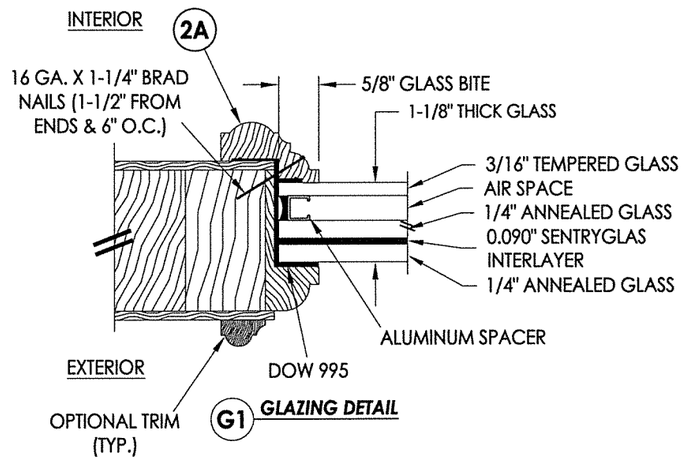

G1 GLAZING DETAIL

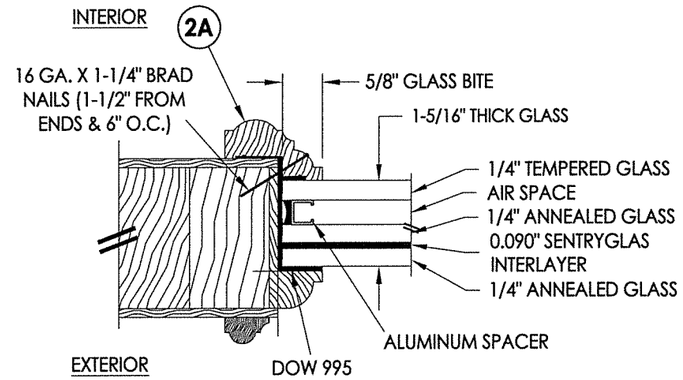

G2 GLAZING DETAIL

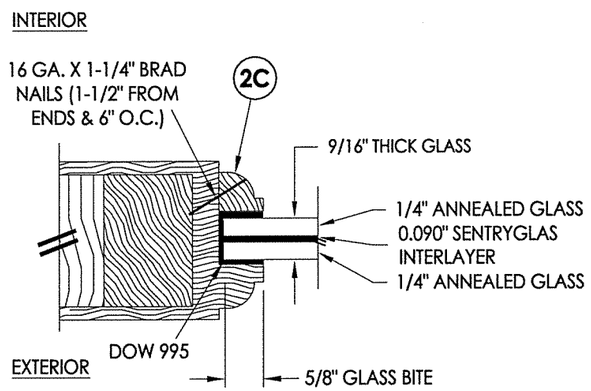

G3 GLAZING DETAIL

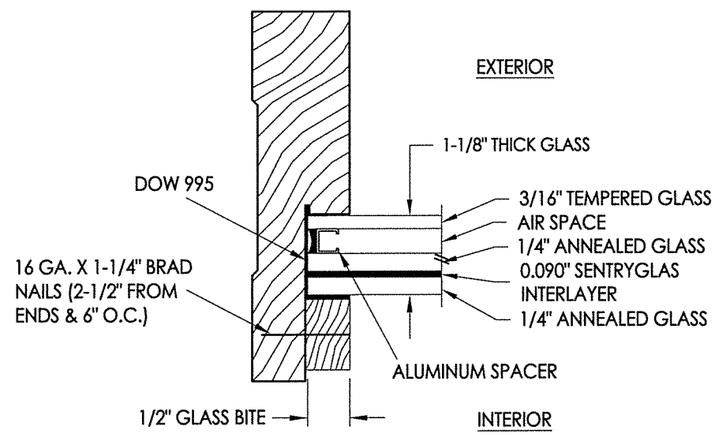

G4 GLAZING DETAIL

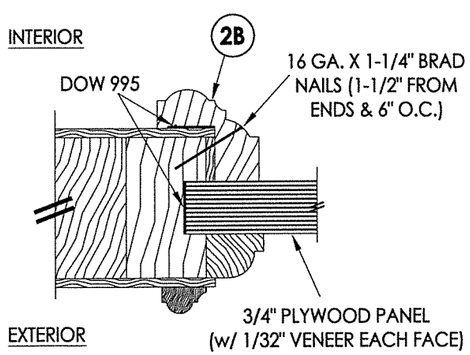

P1 PANEL INFIL DETAIL

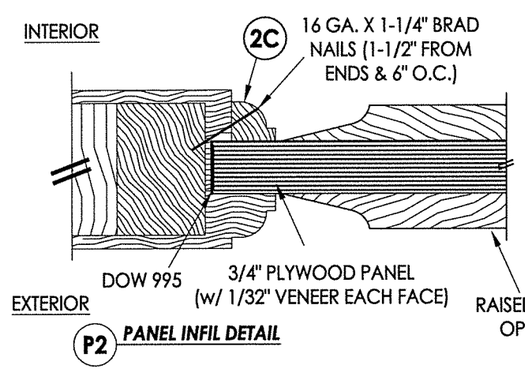

P2 PANEL INFIL DETAIL

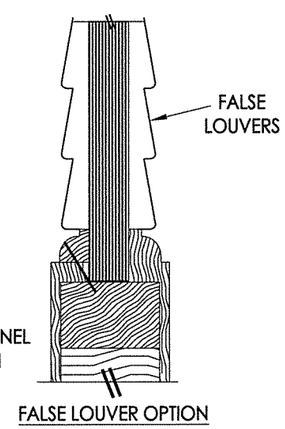

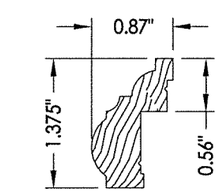

2A GLAZING BEAD

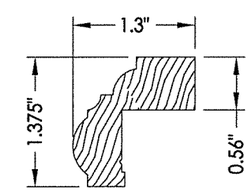

2B GLAZING BEAD

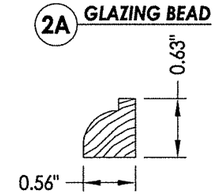

2C GLAZING BEAD

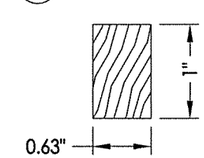

2D GLAZING BEAD

L. F. SCHMIDT LICENSE No. 43409 STATE OF FLORIDA PROFESSIONAL ENGINEER

4-11-17

Documents Prepared By:
Lyndon F. Schmidt
P.E. No. 43409

RW BUILDING CONSULTANTS, INC.
P.O. Box 230, Valrico, FL 33595
Phone No.: 813.659.9197
FBPE C.A. No. 9813

PRODUCT: MILLWORK 360 WOOD DOOR

PART OR ASSEMBLY: GLAZING & PANEL INFIL DETAILS

NO.	DATE	REVISIONS	BY

DATE: 4/03/17
SCALE: N.T.S.
DWG. BY: JK
CHK. BY: LFS
DRAWING NO.: FL-21891.10
SHEET 5 OF 13

© 2017 R.W. BUILDING CONSULTANTS INC.

R:\Clients\Millwork 360\A - Florida Product Approvals\FL-21891 Wood Doors\C - Drawings\FL-21891 (2014)\FL-21891.9-11.dwg, 10.5

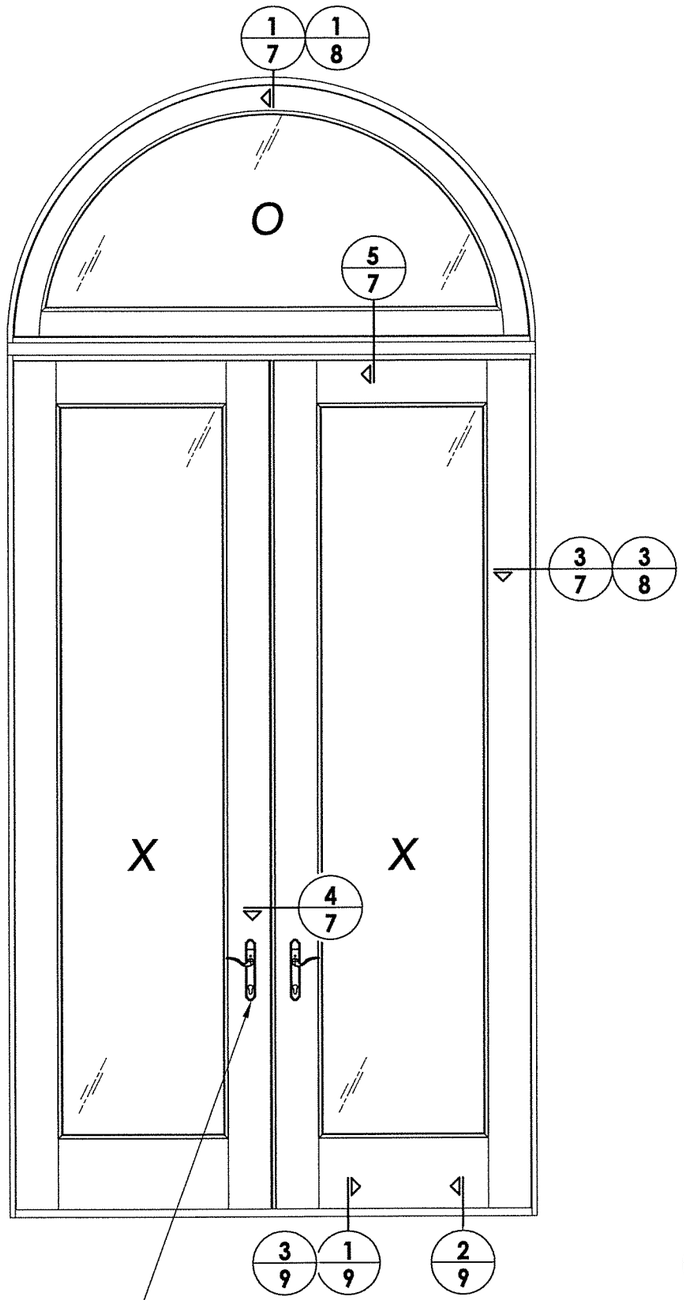

SEE HARDWARE CHART

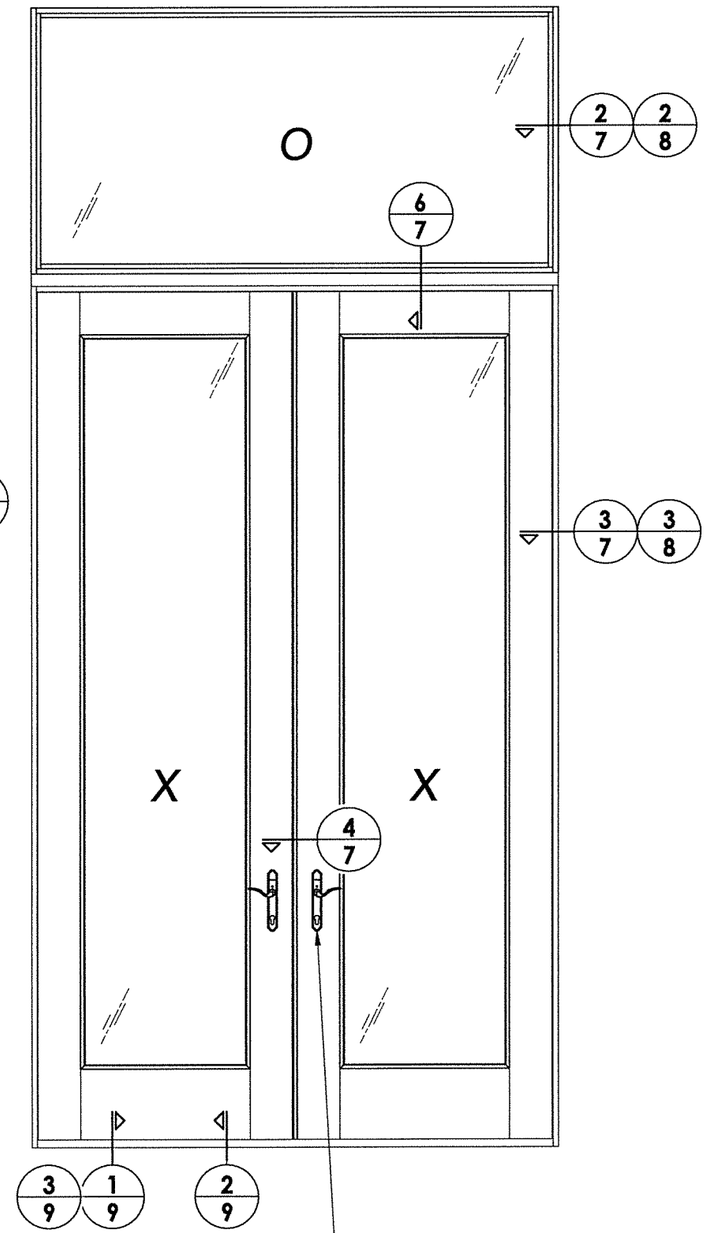

SEE HARDWARE CHART

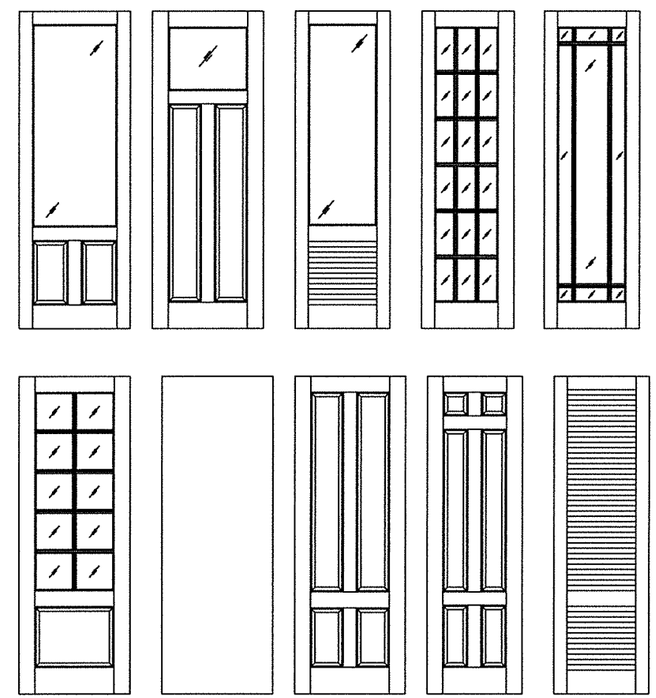

Millwork 360 Door Panel Options

Panel options shown are for illustration and are representative only.
Surface applied muntins are used for simulated divided lites shown.

HARDWARE TABLE	
MANUFACTURER	**MODEL**
HOPPE	**MULITPOINT HARDWARE: HLS 9000 SERIES MULTIPOINT LOCK ACTIVE: ROUNDBOLT/SHOOTBOLT (5-PT.) INACTIVE: SHOOTBOLT (2-PT.)**

L. F. SCHMIDT LICENSE No. 43409 STATE OF FLORIDA PROFESSIONAL ENGINEER

4-11-17

Documents Prepared By:
Lyndon F. Schmidt
P.E. No. 43409

RW BUILDING CONSULTANTS, INC.
P.O. Box 230, Valrico, FL 33595
Phone No.: 813.659.9197
FBPE C.A. No. 9813

PRODUCT: MILLWORK 360 WOOD DOOR

PART OR ASSEMBLY: ELEVATIONS

NO.	DATE	BY

REVISIONS

DATE: 04/03/17
SCALE: N.T.S.
DWG. BY: JK
CHK. BY: LFS
DRAWING NO.: FL-21891.10
SHEET 6 OF 13

R:\Clients\Millwork 360\A - Florida Product Approvals\FL-21891 Wood Doors\C - Drawings\FL-21891 (2014)\FL-21891.9-11.dwg, 10.6

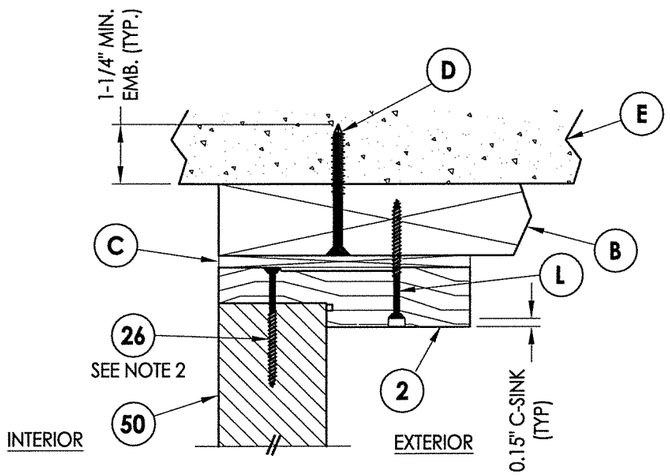

1/7 **VERTICAL CROSS SECTION**
Shown w/ 2X Buck
Inswing shown (Outswing similar)

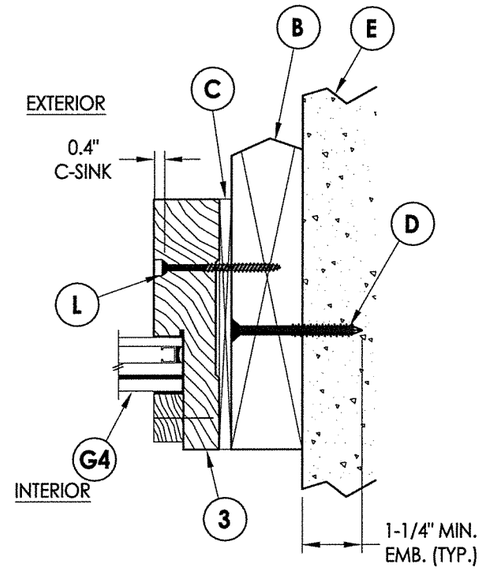

2/7 **HORIZONTAL CROSS SECTION**
Shown w/ 2X Buck
Inswing shown (Outswing similar)

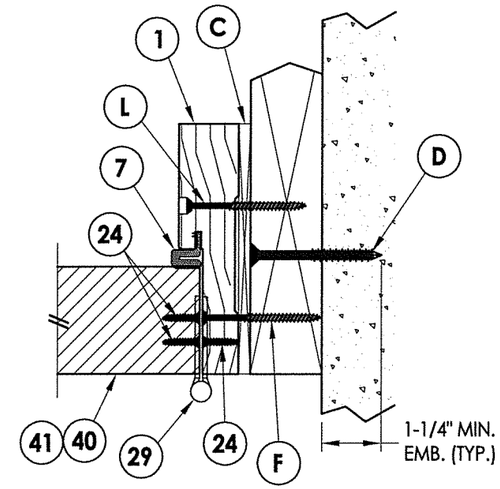

3/7 **HORIZONTAL CROSS SECTION**
Shown w/ 2X Buck
Inswing shown (Outswing similar)

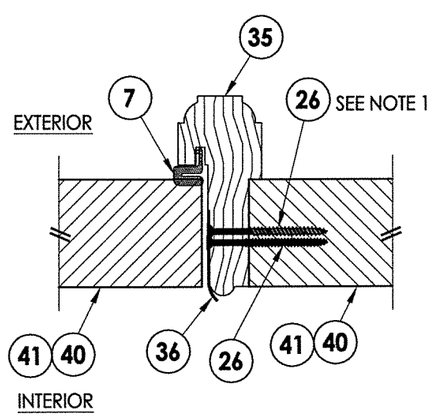

4/7 **HORIZONTAL CROSS SECTION**
Inswing shown (Outswing similar)

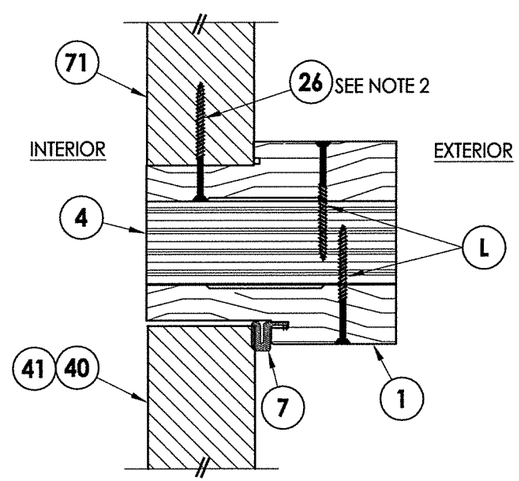

5/7 **VERTICAL CROSS SECTION**
Inswing shown (Outswing similar)

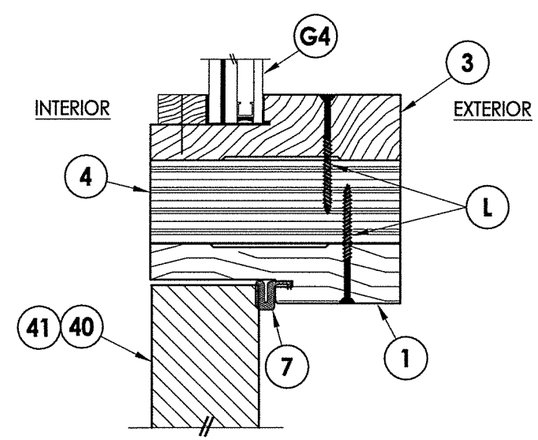

6/7 **VERTICAL CROSS SECTION**
Inswing shown (Outswing similar)

NOTES:
1. Item #26 located 4" from each end & 9 more equally spaced (11 total).
2. Item #26 located 4" from each end & 1 at the center line (3 total).

L.F. SCHMIDT
LICENSE
No. 43409
STATE OF FLORIDA
PROFESSIONAL ENGINEER

4-11-17

Documents Prepared By:
Lyndon F. Schmidt
P.E. No. 43409

RW BUILDING CONSULTANTS, INC.
P.O. Box 230, Valrico, FL 33595
Phone No.: 813.659.9197
FBPE C.A. No. 9813

PRODUCT: MILLWORK 360 WOOD DOOR

PART OR ASSEMBLY: HORIZONTAL & VERTICAL CROSS SECTIONS (2X BUCK)

NO.	DATE	BY	REVISIONS

DATE: 4/03/17
SCALE: N.T.S.
DWG. BY: JK
CHK. BY: LFS
DRAWING NO.: FL-21891.10
SHEET 7 OF 13

R:\Clients\Millwork 360\A - Florida Product Approvals\FL-21891 Wood Doors\C - Drawings\FL-21891 (2014)\FL-21891.9-11.dwg, 10.7

NOTES:
1. Item #26 located 4" from each end & 1 at the center line (3 total).

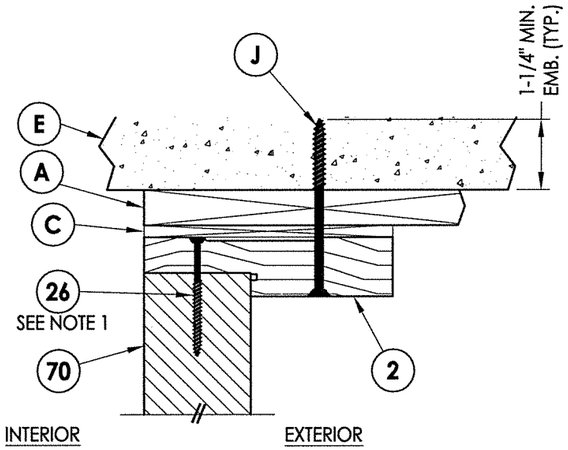

1/8 VERTICAL CROSS SECTION
Shown w/ 1X Buck
Inswing shown (Outswing similar)

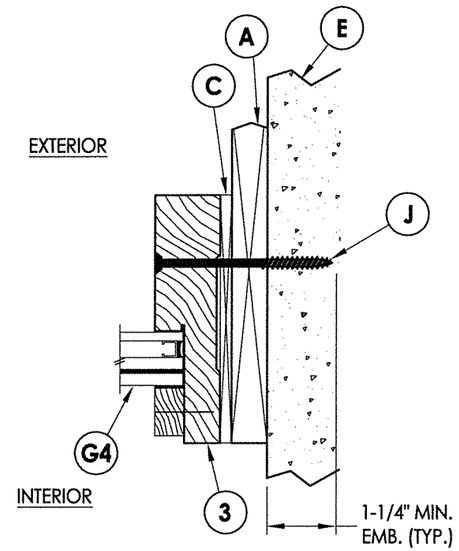

2/8 HORIZONTAL CROSS SECTION
Shown w/ 1X Buck
Inswing shown (Outswing similar)

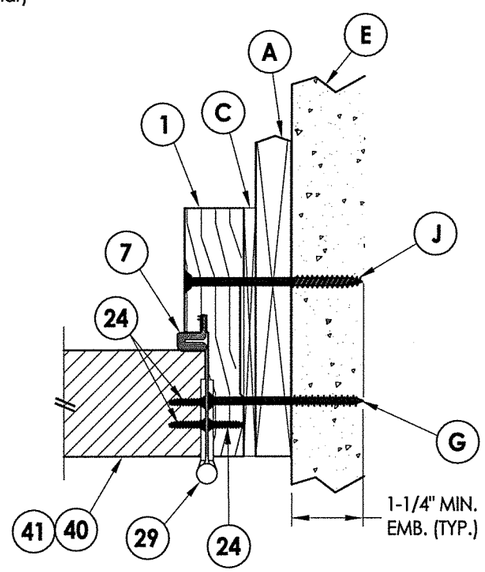

3/8 HORIZONTAL CROSS SECTION
Shown w/ 1X Buck
Inswing shown (Outswing similar)

LYNDON F. SCHMIDT LICENSE No. 43409 STATE OF FLORIDA PROFESSIONAL ENGINEER

Documents Prepared By:
Lyndon F. Schmidt
P.E. No. 43409

RGW BUILDING CONSULTANTS, INC.
P.O. Box 230, Valrico, FL 33595
Phone No.: 813.659.9197
FBPE C.A. No. 9813

PRODUCT: MILLWORK 360 WOOD DOOR

PART OR ASSEMBLY: HORIZONTAL & VERTICAL CROSS SECTIONS (1X BUCK)

NO.	DATE	BY

REVISIONS

DATE: 4/03/17
SCALE: N.T.S.
DWG. BY: JK
CHK. BY: LFS
DRAWING NO.: FL-21891.10
SHEET 8 OF 13

R:\Clients\Millwork 360\A - Florida Product Approvals\FL-21891 Wood Doors\C - Drawings\FL-21891 (2014)\FL-21891.9-11.dwg, 10.8

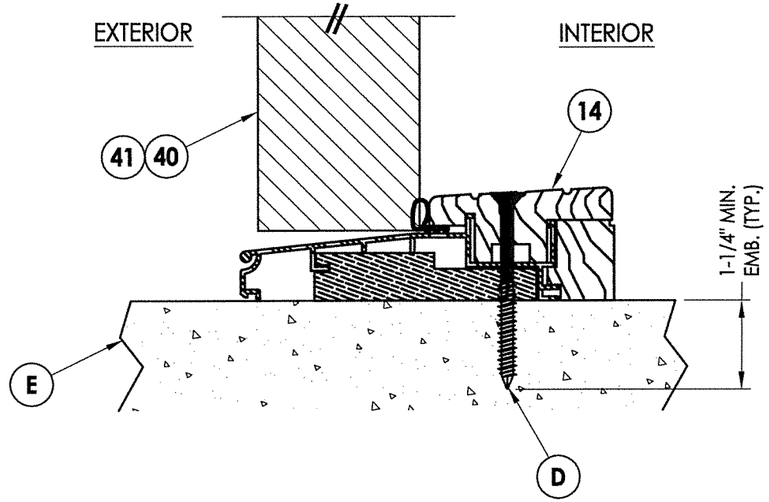

1/9 VERTICAL CROSS SECTION
Outswing

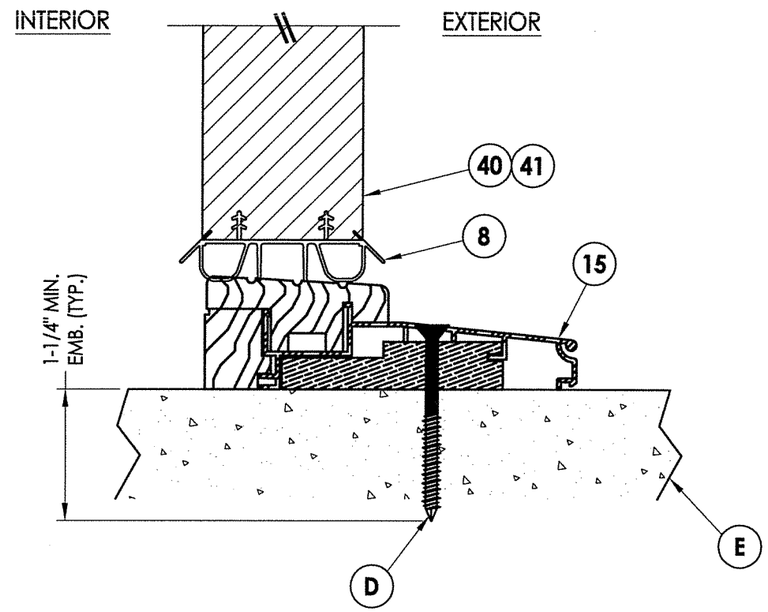

2/9 VERTICAL CROSS SECTION
Inswing

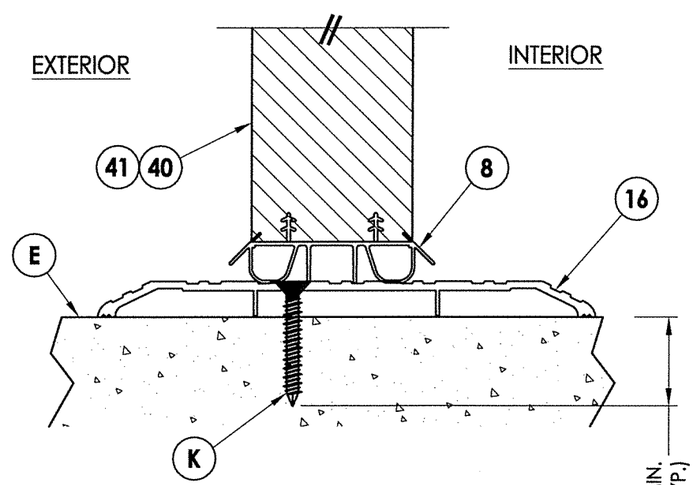

3/9 VERTICAL CROSS SECTION
Inswing shown (Outswing similar)

L. F. SCHMIDT
LICENSE
No. 43409
STATE OF FLORIDA
PROFESSIONAL ENGINEER

4-11-17

Documents Prepared By:
Lyndon F. Schmidt
P.E. No. 43409

BUILDING CONSULTANTS, INC.
P.O. Box 230, Valrico, FL 33595
Phone No.: 813.659.9197
FBPE C.A. No. 9813

PRODUCT: MILLWORK 360 WOOD DOOR

PART OR ASSEMBLY: VERTICAL CROSS SECTIONS (THRESHOLD)

NO.	DATE	BY	REVISIONS

DATE: 4/03/17
SCALE: N.T.S.
DWG. BY: JK
CHK. BY: LFS
DRAWING NO.: FL-21891.10
SHEET 9 OF 13

R:\Clients\Millwork 360\A - Florida Product Approvals\FL-21891 Wood Doors\C - Drawings\FL-21891 (2014)\FL-21891.9-11.dwg, 10.9

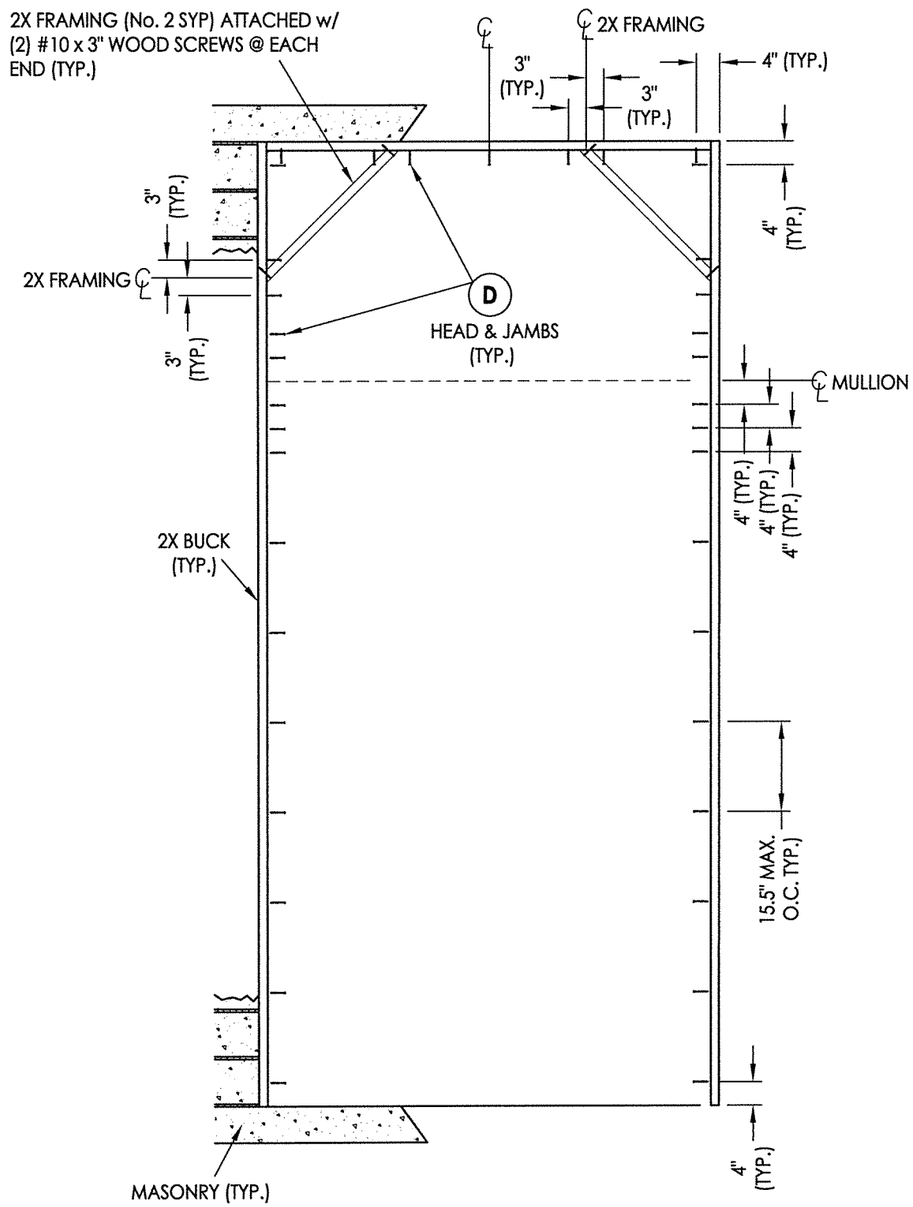

2X BUCK ANCHORING

O/XX (Arch Top Transom)

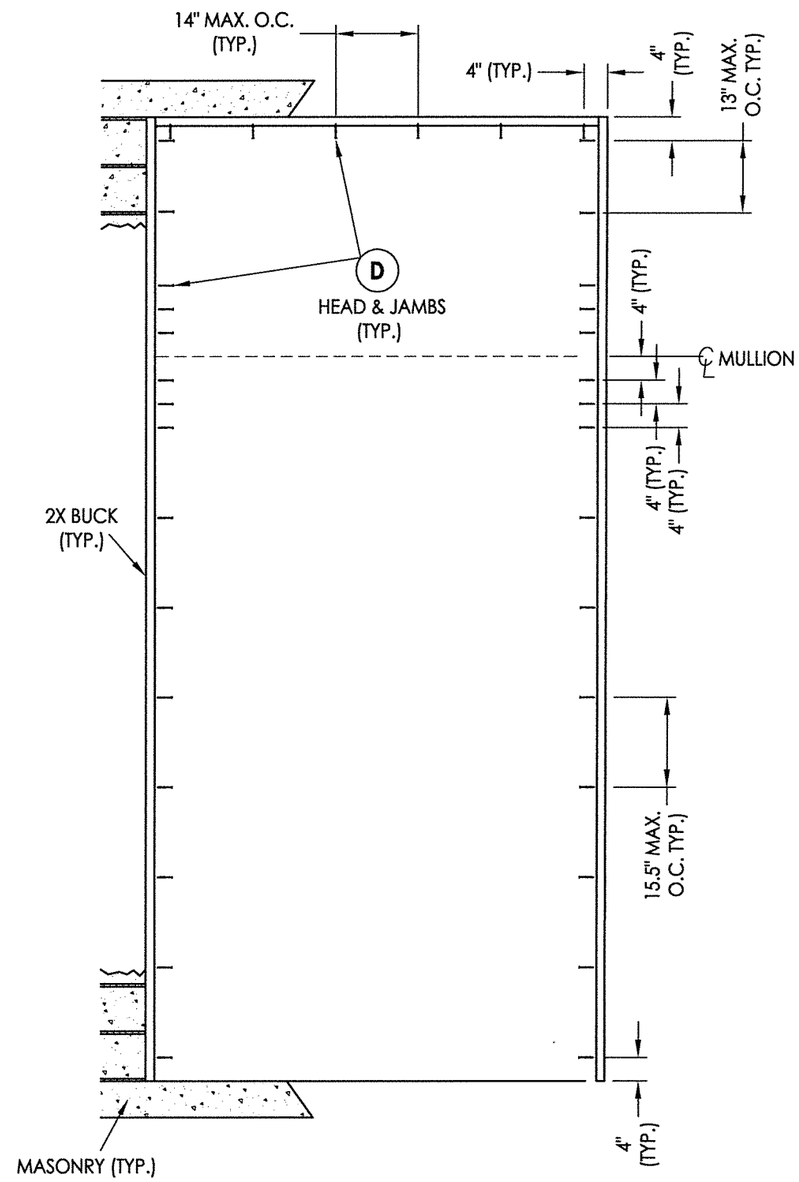

2X BUCK ANCHORING

O/XX

NOTE:
1. ALL FRAME CORNERS SECURED WITH (3) #8 X 2-1/2" FH DEEP THREAD WOOD SCREWS @ SILL.

LYNDON F. SCHMIDT
LICENSE
No. 43409
STATE OF FLORIDA
PROFESSIONAL ENGINEER

4-11-17

Documents Prepared By:
Lyndon F. Schmidt
P.E. No. 43409

RW BUILDING CONSULTANTS, INC.
P.O. Box 230, Valrico, FL 33595
Phone No.: 813.659.9197
FBPE C.A. No. 9813

PRODUCT: MILLWORK 360 WOOD DOOR

PART OR ASSEMBLY: BUCK ANCHORING

NO.	DATE	BY

REVISIONS

DATE: 4/03/17
SCALE: N.T.S.
DWG. BY: JK
CHK. BY: LFS
DRAWING NO.: FL-21891.10
SHEET 10 OF 13

© 2017 R.W. BUILDING CONSULTANTS INC.

R:\Clients\Millwork 360\A - Florida Product Approvals\FL-21891 Wood Doors\C - Drawings\FL-21891 (2014)\FL-21891.9-11.dwg, 10.10

NOTE: ANCHORING OF FRAMING TO 1X BUCK IS THE RESPONSIBILITY OF THE BUILDING DESIGNER.

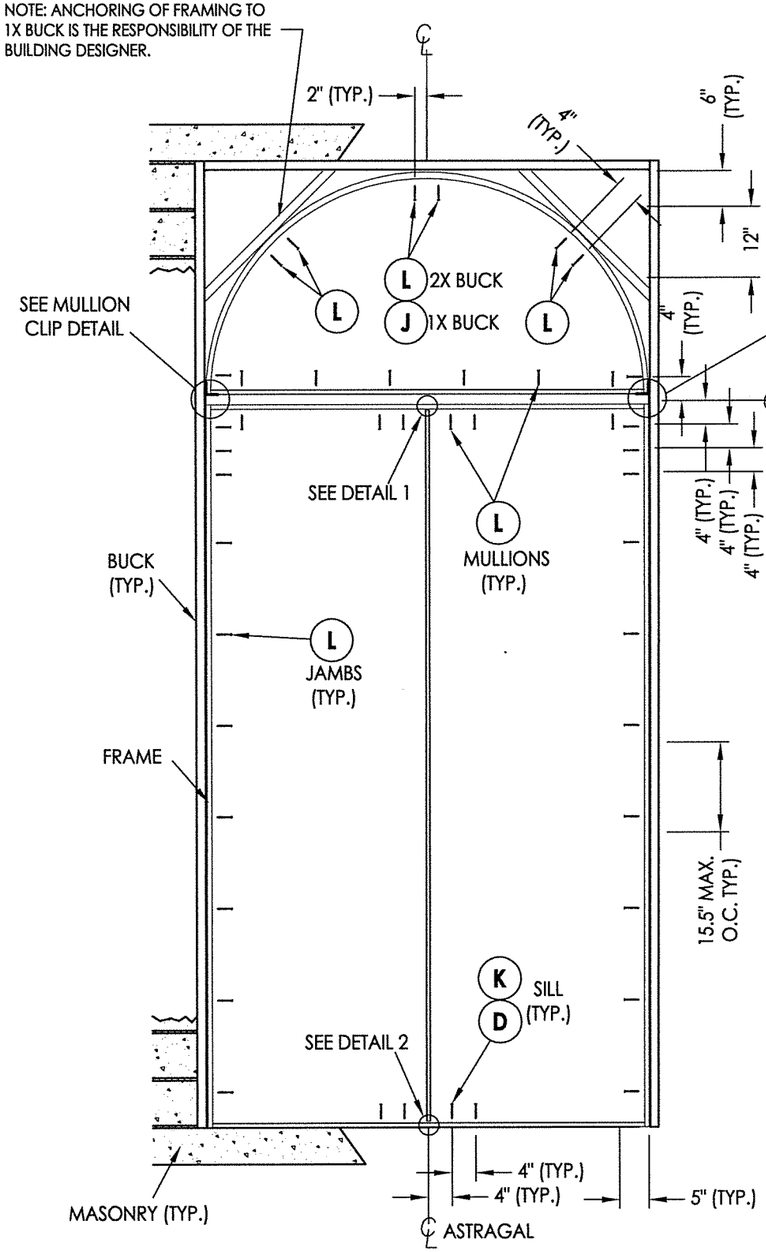

FRAME ANCHORING
O/XX (Arch Top Transom)

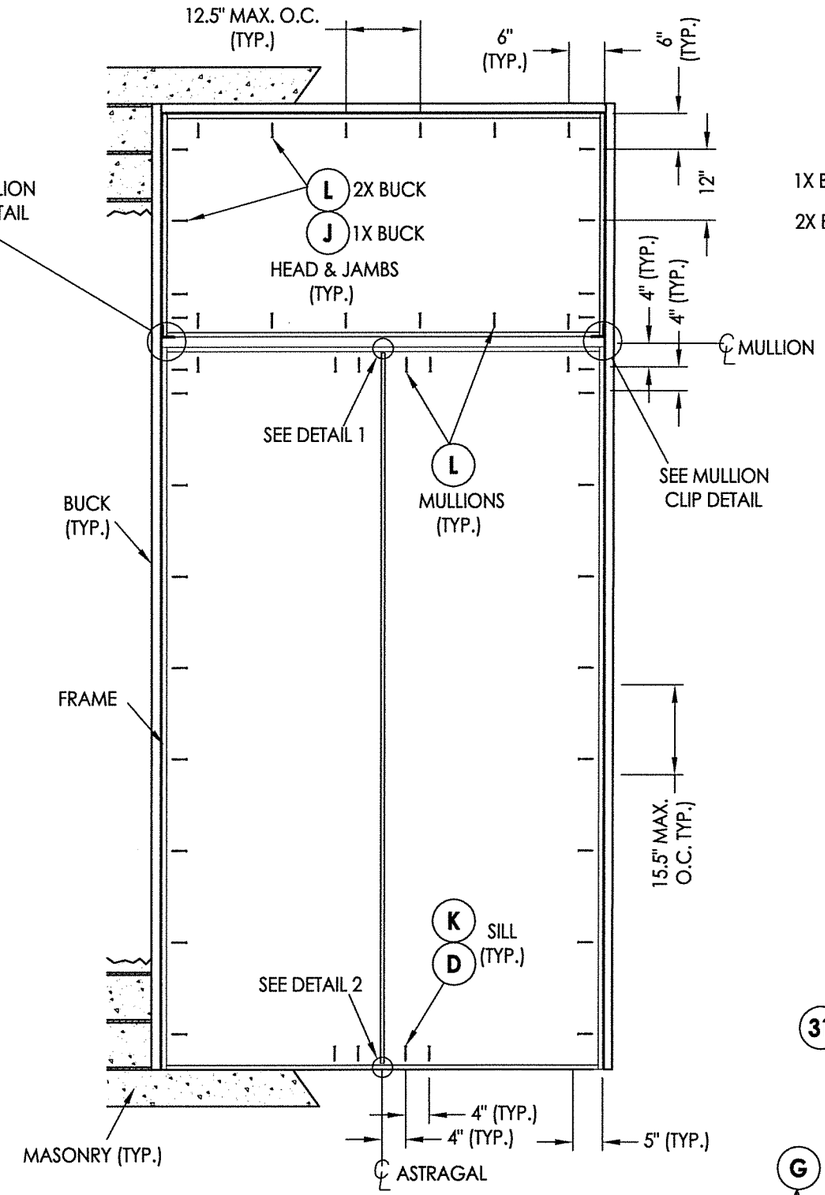

FRAME ANCHORING
O/XX

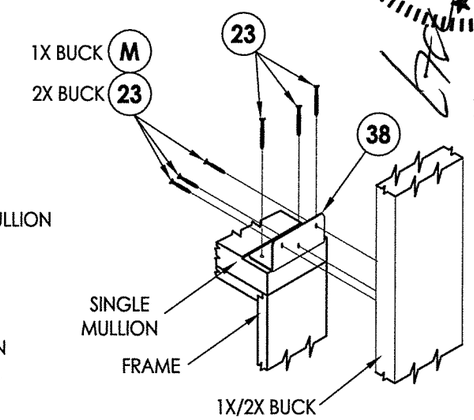

MULLION CLIP DETAIL

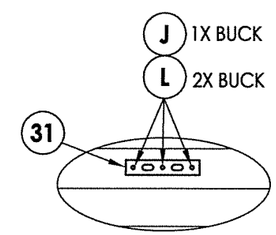

DETAIL 1

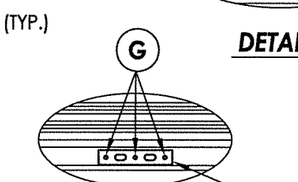

DETAIL 2
Inswing

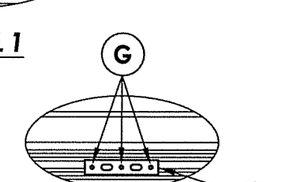

DETAIL 2
Outswing

NOTE:
1. ALL FRAME CORNERS SECURED WITH (3) #8 X 2-1/2" FH DEEP THREAD WOOD SCREWS @ SILL.

L. F. SCHMIDT LICENSE No. 43409 STATE OF FLORIDA PROFESSIONAL ENGINEER

4-11-17

Documents Prepared By:
Lyndon F. Schmidt
P.E. No. 43409

RW BUILDING CONSULTANTS, INC.
P.O. Box 230, Valrico, FL 33595
Phone No.: 813.659.9197
FBPE C.A. No. 9813

PRODUCT: MILLWORK 360 WOOD DOOR

PART OR ASSEMBLY: FRAME ANCHORING

NO.	DATE	REVISIONS	BY

DATE: 4/03/17
SCALE: N.T.S.
DWG. BY: JK
CHK. BY: LFS
DRAWING NO.: FL-21891.10
SHEET 11 OF 13

© 2017 R.W. BUILDING CONSULTANTS INC.

R:\Clients\Millwork 360\A - Florida Product Approvals\FL-21891 Wood Doors\C - Drawings\FL-21891 (2014)\FL-21891.9-11.dwg, 10.11

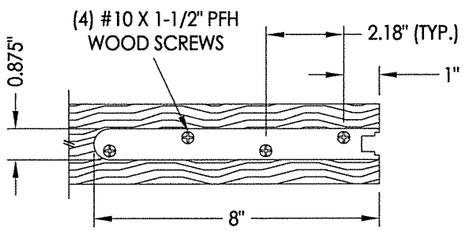

SHOOTBOLT REINFORCMENT

AT TOP & BOTTOM OF DOOR PANEL
(1/8" THICK STEEL)

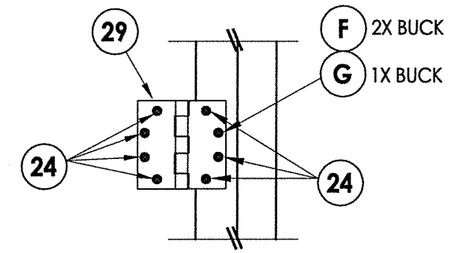

HINGE DETAIL

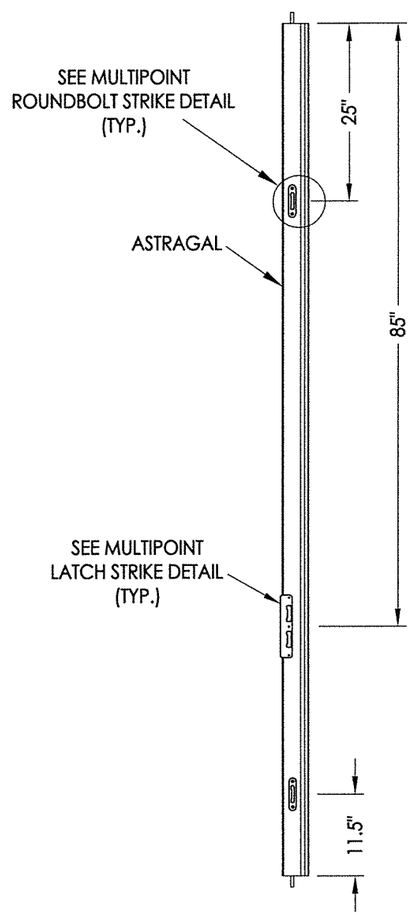

MULTIPOINT LOCK DETAILS

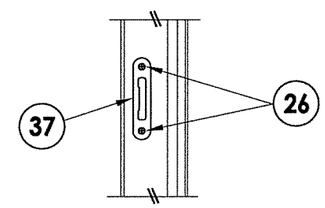

MULITPOINT ROUNDBOLT STRIKE DETAIL

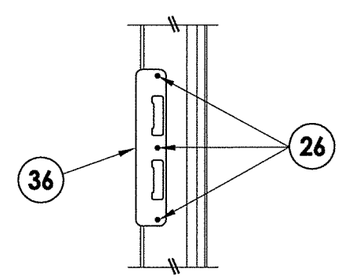

MULITPOINT STRIKE DETAIL

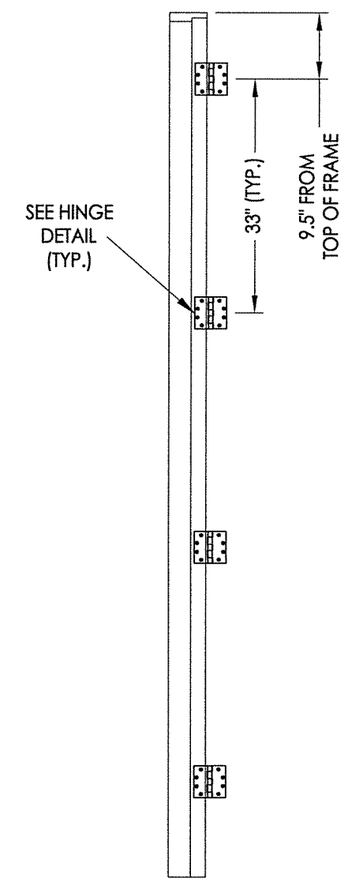

HINGE JAMB

STATE OF FLORIDA
PROFESSIONAL ENGINEER
LYNDON F. SCHMIDT
LICENSE
No. 43409

4-11-17

Documents Prepared By:
Lyndon F. Schmidt
P.E. No. 43409

RW BUILDING CONSULTANTS, INC.
P.O. Box 230, Valrico, FL 33595
Phone No.: 813.659.9197
FBPE C.A. No. 9813

PRODUCT: MILLWORK 360 WOOD DOOR

PART OR ASSEMBLY: HARDWARE DETAILS

NO.	DATE	BY

REVISIONS

DATE: 4/03/17
SCALE: N.T.S.
DWG. BY: JK
CHK. BY: LFS
DRAWING NO.: FL-21891.10
SHEET 12 OF 13

© 2017 R.W. BUILDING CONSULTANTS INC.

R:\Clients\Millwork 360\A - Florida Product Approvals\FL-21891 Wood Doors\C - Drawings\FL-21891 (2014)\FL-21891.9-11.dwg, 10.12

BILL OF MATERIALS

ITEM #	DESCRIPTION	MATERIAL
A	1X BUCK (SG >= 0.42)	WOOD
B	2X BUCK (SG >= 0.42)	WOOD
C	1/4" MAX. SHIM SPACE	-
D	1/4" X 2-3/4" PFH ELCO OR ITW CONCRETE SCREW	STEEL
E	MASONRY - 3,000 PSI MIN. CONCRETE CONFORMING TO ACI 301 OR HOLLOW BLOCK CONFORMING TO ASTM C90	CONCRETE
F	#12 X 2-1/2" PFH WOOD SCREW	STEEL
G	3/16" X 3-1/4" PFH ITW CONCRETE SCREW	STEEL
J	1/4" X 3-3/4" PFH ELCO OR ITW CONCRETE SCREW	STEEL
K	1/4" X 1-3/4" PFH ELCO OR ITW CONCRETE SCREW	STEEL
L	#10 X 2-1/2" PFH WOOD SCREW (1.15" MIN. EMBEDMENT)	STEEL
M	3/16" X 2-1/4" PFH ITW CONCRETE SCREW	STEEL
1	JAMB (DOOR)	WOOD
3	JAMB (TRANSOM - DIRECT SET)	WOOD
4	MULLION	LVL
7	WEATHERSTRIP	FOAM
8	SWEEP	VINYL
14	OUTSWING THRESHOLD	ALUM/COMP
15	INSWING THRESHOLD	ALUM/COMP
16	ADA THRESHOLD	ALUM
23	#10 X 1-1/2" PFH WOOD SCREW	STEEL
24	#12 x 1" PFH WOOD SCREW	STEEL
25	#8 x 1-3/4" PFH WOOD SCREW	STEEL
26	#8 x 2-1/2" PFH WOOD SCREW	STEEL
29	4.5" X 4.5" HINGE	STEEL
31	SHOOTBOLT STRIKE PLATE	STEEL
35	ASTRAGAL	WOOD
36	MULTIPOINT STRIKE PLATE	STEEL
37	MULITPOINT ROUNDBOLT STRIKE DETAIL	STEEL
38	MULLION ANGLE CLIP (USP ML24-TZ)	STEEL
40	DOOR PANEL	WOOD
41	DOOR PANEL	WOOD
50	SIDELITE PANEL	WOOD
51	SIDELITE PANEL (DIRECT SET)	WOOD
70	TRANSOM PANEL	WOOD

WOOD FRAME COMPONENTS: SIPO (UTILE) (G = 0.53)

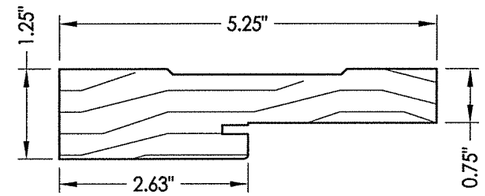

1 **WOOD JAMB** (DOOR)

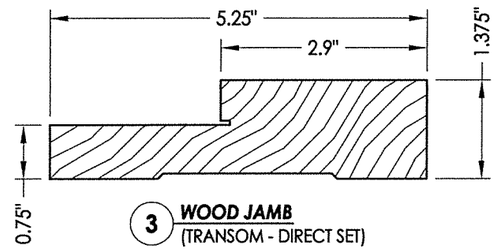

3 **WOOD JAMB** (TRANSOM - DIRECT SET)

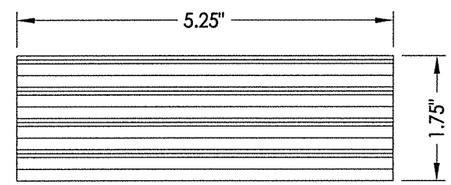

4 **MULLION** VERSA-LAM® 3100 Fb-2.0E

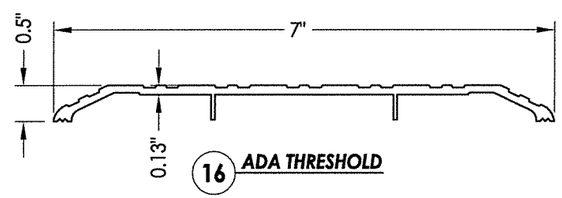

16 **ADA THRESHOLD**

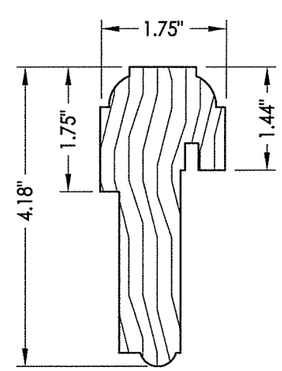

35 **ASTRAGAL**

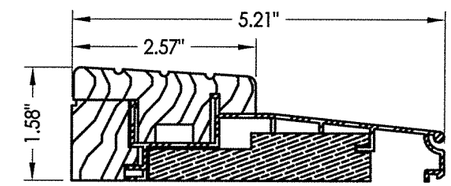

15 **INSWING THRESHOLD** WORLDWIDE

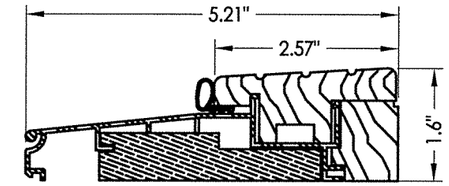

14 **OUTSWING THRESHOLD** WORLDWIDE

CONCRETE ANCHOR NOTES:

1. Concrete anchor locations at the corners may be adjusted to maintain the min. edge distance to mortar joints.
2. Concrete anchor locations noted as "MAX. ON CENTER" must be adjusted to maintain the min. edge distance to mortar joints, additional concrete anchors may be required to ensure the "MAX. ON CENTER" dimension are not exceeded.
3. Concrete anchor table:

ANCHOR TYPE	ANCHOR SIZE	MIN. EMBEDMENT	MIN. CLEARANCE TO MASONRY EDGE	MIN. CLEARANCE TO ADJACENT ANCHOR
ITW TAPCON®	1/4"	1-1/4"	2"	4"
ELCO ULTRACON®	1/4"	1-1/4"	1"	4"
ITW TAPCON®	3/16"	1-1/4"	3"	1-1/2"

WOOD SCREW INSTALLATION NOTES:

1. Maintain a minimum 5/8" edge distance, 1" end distance, & 1" o.c. spacing of wood screws to prevent the splitting of wood.

L. F. SCHMIDT LICENSE No. 43409 STATE OF FLORIDA PROFESSIONAL ENGINEER

4-11-17

Documents Prepared By:
Lyndon F. Schmidt
P.E. No. 43409

RW BUILDING CONSULTANTS, INC.
P.O. Box 230, Valrico, FL 33595
Phone No.: 813.659.9197
FBPE C.A. No. 9813

PRODUCT: MILLWORK 360 WOOD DOOR

PART OR ASSEMBLY: BILL OF MATERIALS & COMPONENTS

NO.	DATE	REVISIONS	BY

DATE: 4/03/17
SCALE: N.T.S.
DWG. BY: JK
CHK. BY: LFS
DRAWING NO.: FL-21891.10
SHEET 13 OF 13

© 2017 R.W. BUILDING CONSULTANTS INC.

R:\Clients\Millwork 360\A - Florida Product Approvals\FL-21891 Wood Doors\C - Drawings\FL-21891 (2014)\FL-21891.9-11.dwg, 10.13